Developing an integrated system supporting contemporary Home–Care

B. Spyropoulos, A. Tzavaras, M. Botsivaly, D. Kligopoulos, A. I. Filippas, K. Mertika, T. Athanassiadis, E. Koulouris, D. Liargovas, A. Lychounas, K. Koutsourakis

Medical Instrumentation Technology Department
Technological Education Institute of Athens, Greece

Email: basile@teiath.gr **URL:** www.bmtl.bme.teiath.gr

The aim of the project

- The aim of the present project [1] was the development of an integrated system, addressing crucial aspects of contemporary home – care that comprises of:
  - *First, a high-performance, C-programmable controller Rabbit Semiconductor® with a compact form factor supporting home-care patient's vital-signs monitoring and/or regulating mechanical ventilation.*
  - *Second, software means for the processing of the acquired health data and the evaluation of the treatment schema.*
  - *Finally, software tools for the planning, the documentation, and the management of the corresponding home-care case. The system is designed to cover the monitoring, treatment, and managerial needs for the most frequent home-care cases.*
- The system is designed to cover the monitoring, treatment [2], and managerial needs for the most frequent home-care cases.

The monitoring hardware part modules of the system

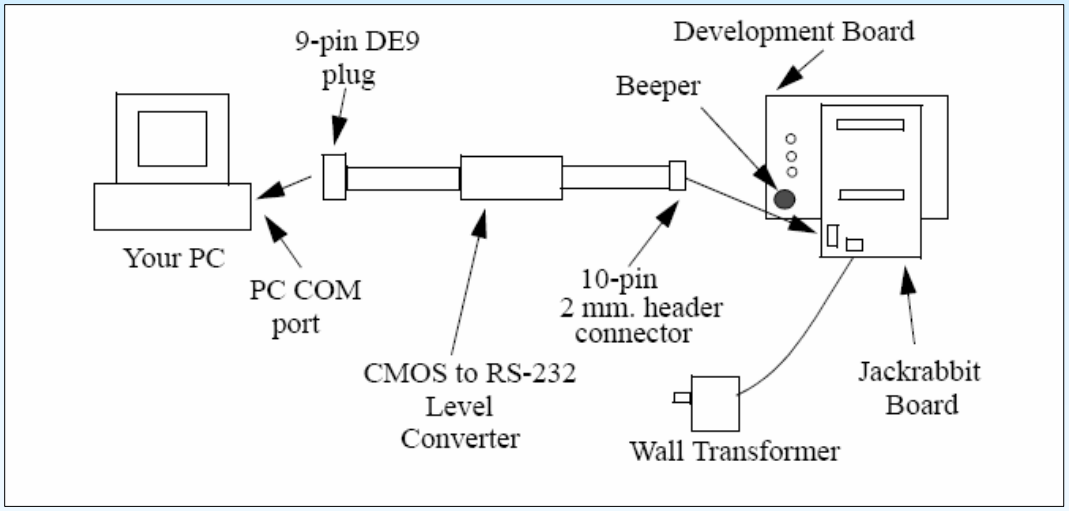

Hook-up connection of the development board (Jackrabbit®) to any PC for the development of software [Source: Rabbit Semiconductor]

- First, a custom-made ECG (Eindhoven leads I-III) acquisition module based on a JFET Operational Amplifier TL074 (300 Hz sampling rate), equipped optionally with a 433 MHz RF link between an amplifier and a PC.
- Second, a Nellcor finger pulse oximetry probe for typical plethysmography based Oxygen Saturation (SpO2) measurements and the estimation of Heart Rate (HR) and Respiration Rate (RR).
- Finally, a custom-made Carotid Sounds (CS) acquisition module, comprising of a stethoscope, a microphone, and an amplifier, for the extraction of Heart Rate (HR) and Respiration Rate (RR).

The monitoring hardware and the BLDC driving system block diagrams

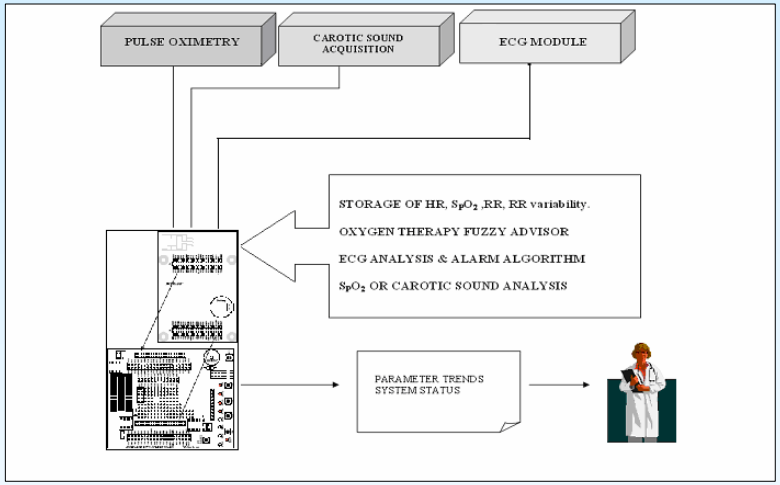

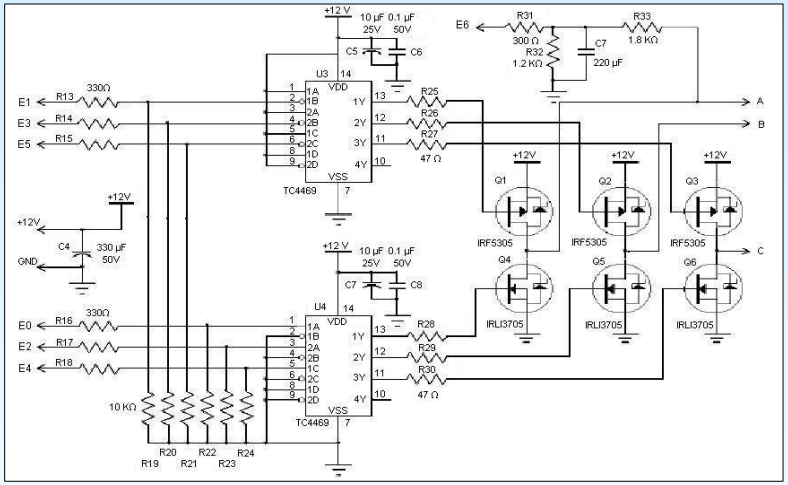

- The biosignals' sensors can be connected to a commercially available high-performance, C-programmable controller with a compact form factor, equipped with a Rabbit 2000 microprocessor operating at 25.8 MHz providing fast data processing.
- The system comprises of an additional development board, and the essentials needed for the design of a custom-made microprocessor-based system. A complete software development system (Dynamic C) is also included.
- The acquired row data and trends of SpO2, HR, RR, ECG waveforms, Oxygen Therapy advice etc. are processed to produce decision supportive data.

The custom-made prototype CPAP-ventilator operation description

- The *ventilation hardware* part of the system comprises of a custom-made prototype CPAP-ventilator, driven by a brushless direct current (BLDC) motor.
- A sensor-less signal conditioning method of identifying the rotor position of a brushless DC (BLDC) motor [3] was employed.
- A six steps technique is applied to drive the motor smoothly from standstill without any position sensors, by monitoring the current responses to the inductance variation on the rotor position.
- Rotation is achieved by employing a three phase bridge, comprising of six Metal Oxide Semiconductor Field Effect Transistors (MOSFETs).
- The rotor position at standstill is detected by comparing the first and second differences of six current pulses injected into every two phases of the motor.
- Once the motor starts up, a pulse train, is injected into the commutation phases corresponding to the maximum torque production and the next commutation phases in alternating fashion.
- A 6 x 256 Reference Matrix provides for information about the next commutation timing, when the current responses of the pulses cross each other in the same time delay.
- The method can drive a BLDC motor smoothly without any vibration or time delay up to medium speed. Beyond this medium speed, the classical back-EMF method is employed to drive the BLDC motor at high speed.

The switching configuration regulating the cycle of the Pulse Width Modulation driven BLDC motor

- The Pulse Width Modulation driven BLDC motor can provide for adequate air – oxygen flow and subsequently an appropriate pressure cycle, for the developed home-care CPAP, to support home ventilation in the case of, for example, of a patient, suffering from Chronic Obstructive Pulmonary Diseases (COPD).
- The output pressure was measured by employing differential pressure transducers (Freescale MPX 2010, 0-100 cm H2O and HoneyWell XCA400.3DN 0.0-0.3 psi respectively) attached to a Data Acquisition Card (16 channels Advantech PCI 1710, 12 bit A/D, and 100 kHz sampling rate).
- The system is based on relatively low-cost commercially available components and devices, and allows for the creation of various home-care hardware modules, tailored to the specific individual patient.

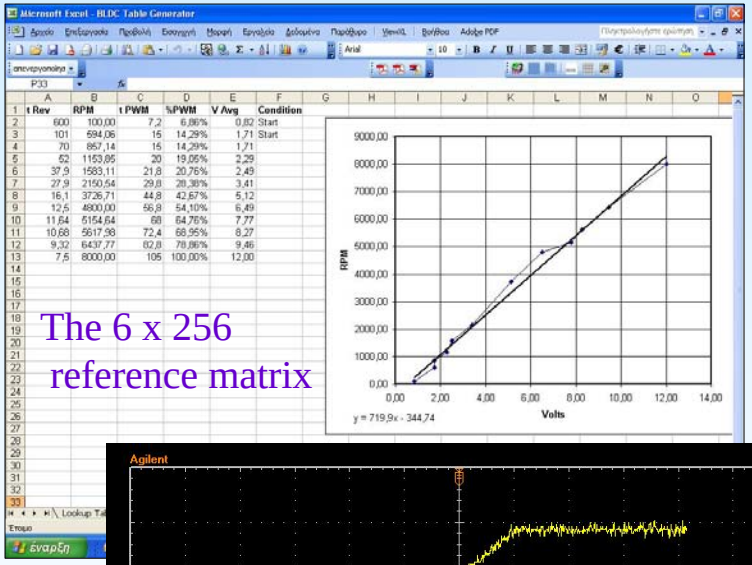

The 6 x 256 reference matrix

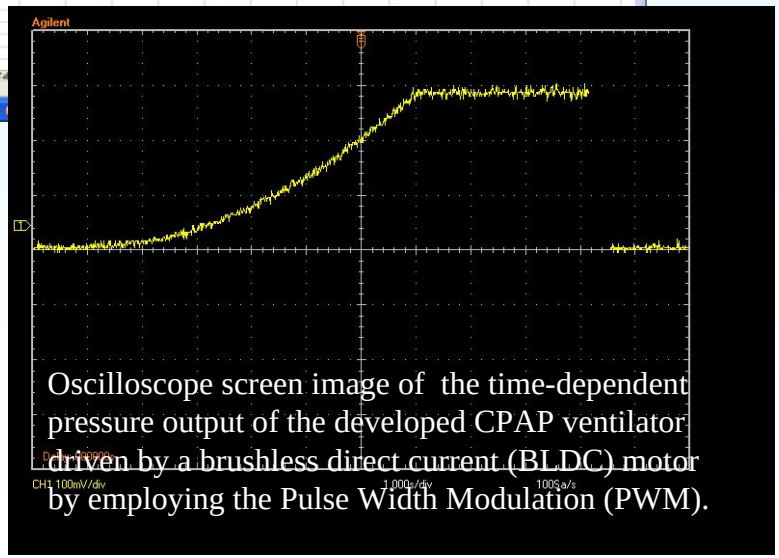

Oscilloscope screen image of the time-dependent pressure output of the developed CPAP ventilator driven by a brushless direct current (BLDC) motor by employing the Pulse Width Modulation (PWM).

Processing and evaluation of the acquired data

- The software means of the system, for the processing of the acquired health data and the evaluation of the treatment schemata, comprise presently of:
  - *First, software for the detection of Ventricular fibrillation (VF) and malignant ventricular tachycardia (VT).*
  - *Second, software for producing advice on home-based Oxygen Therapy management.*
- A home computer equipped with the above mentioned 433 MHz RF link between the ECG amplifier and the PC, enables the quasi real time acquisition and processing of the necessary ECG data to recognize critical situations.

The detection of shockable rhythms

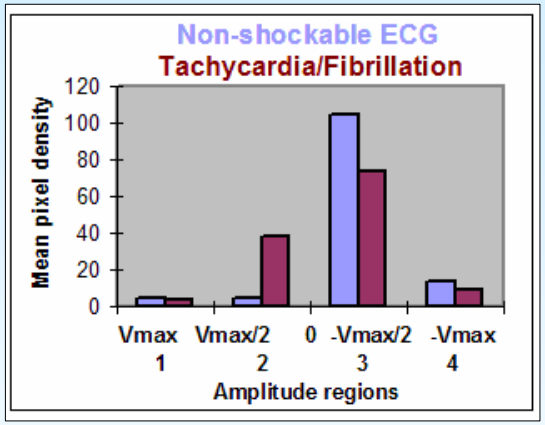

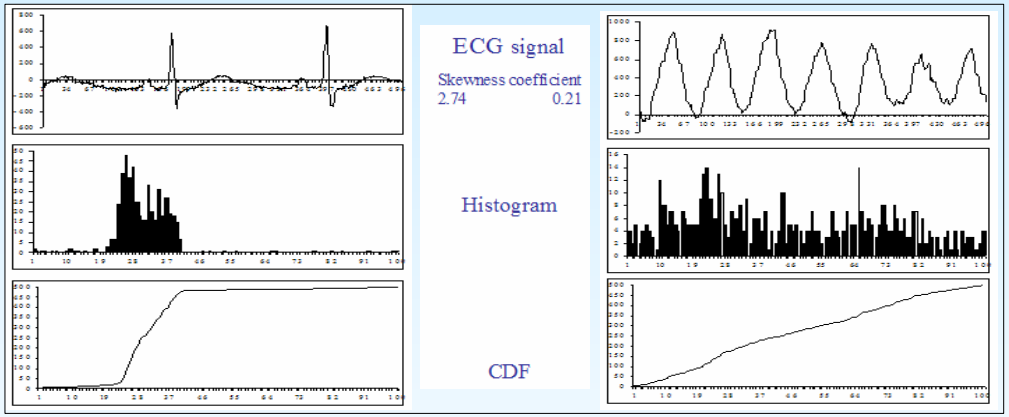

- Early defibrillation is the key to achieve a satisfactory survival rate from cardiac arrest and the general medical consensus is that VF and malignant VT should be shocked and all other rhythms should not.
- Life threatening cardiac arrhythmias are Ventricular fibrillation (VF) and malignant ventricular tachycardia (VT).
- The detection of shockable rhythms was made by employing two developed methods, based on the Image Analysis (left) and on the CDF-SKEW techniques (right).

A Fuzzy logic algorithm producing advice on Oxygen Therapy management

- Further, a Fuzzy logic algorithm was designed and implemented for producing advice on Oxygen Therapy management.
- The system's response is best described with the graphical representation of the relationship between a pair of input parameters and the system's output.
- Three of the physiology parameters acquired by the acquisition modules, the Oxygen Saturation (SpO2), the Heart rate (HR) and the Respiration Rate (RR) are used as inputs for the algorithm.
- The change in Oxygen Saturation over time (dSpO2), which is a reliable factor for evaluating stability, deterioration or improvement of patients' health status, is also included in the model as an indication of the effectiveness of oxygen therapy.
- The inputs are translated from crisp values to linguistic variables and the system's response is dictated by a set of fuzzy rules, which were derived based on well established respiration physiology principles.
- The system actually produces an advice on the percentage change of Oxygen flow to the patient and the translation of its output back to crisp values is performed with the Centroid Defuzziation method.

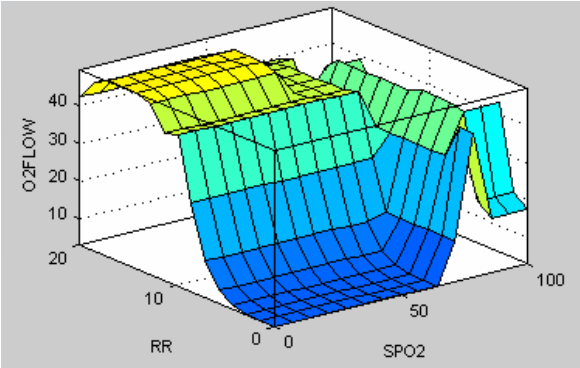

Management of home-care

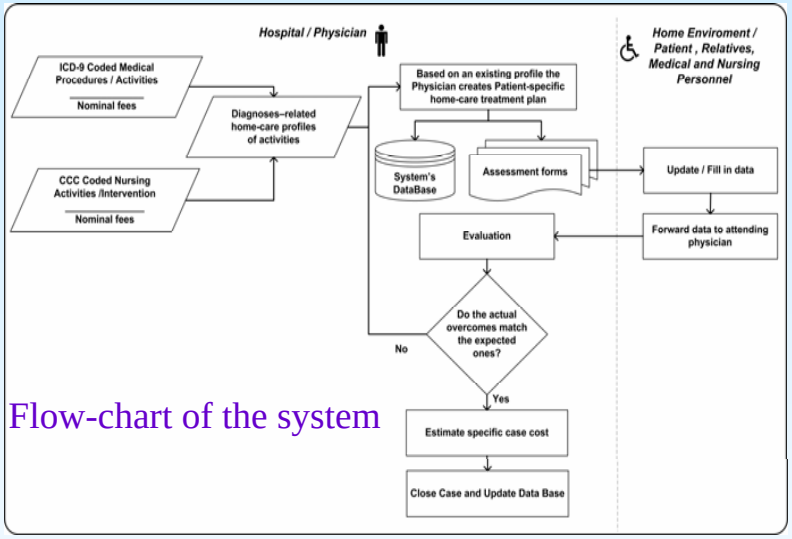

Flow-chart of the system

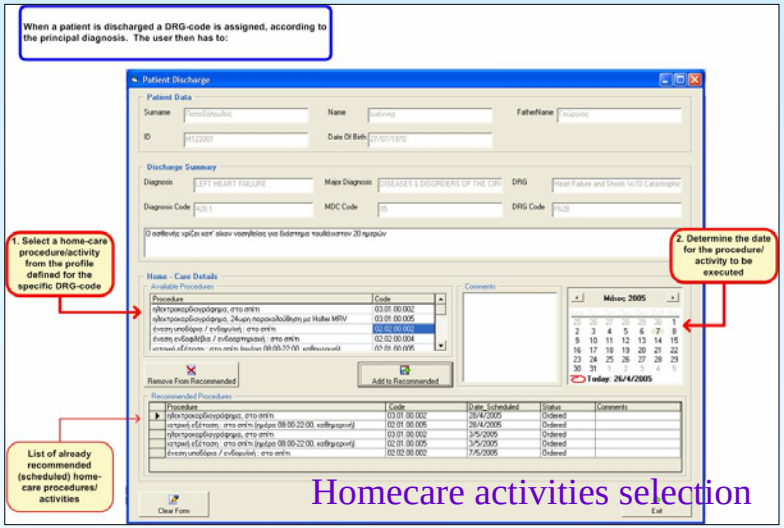

Homecare activities selection

- Sharing of healthcare related information among the different healthcare providers is a crucial aspect for the continuity of the provided care.
- The developed home-care management system is to be used upon the transition or the referral of a patient, and especially in transition from hospital to homecare.
- The function of the developed system is based upon the creation of a structured subset of data, concerning the most relevant facts about a patient's healthcare, organized and transportable, in order to be employed during the post-discharge homecare period, enabling simultaneously the planning and the optimal documentation of the provided homecare.
- The structure and the content of the created data sets are complying with the ASTM E2369-0 Standard [4], Specification for Continuity of Care Record (CCR). The developed system consists of two modules.

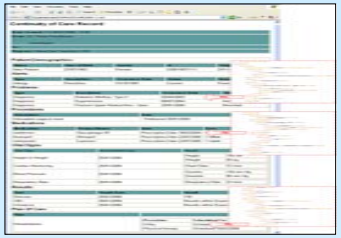

Detailed description of the Home-care Management System

- The first module is responsible for the creation of a typical CCR that contains the appropriate demographic and administrative data, as well as the relevant clinical information, while the second module is responsible for the creation of a homecare plan which will be included in the Care Plan section of the CCR. The system is intended to be used upon the transition of a patient from hospital to homecare, although the first module alone could actually be used in any case of transition or referral. The typical–CCR module can either collect the necessary data from an already installed EHR system or allow the user to enter the data manually by filling special forms. In any case, the user decides which parts of the patient's medical record (electronic or paper) are the most significant ones or are the necessary ones for the description of the current health status of the patient and should be included in the CCR.
- The second module is responsible for the creation of the homecare plan by creating a structured subset of data, containing monitoring, treatment, diagnostic, and nursing activities [5] that should be employed during the post-discharge home-care period. The developed model allows for every Hospital Department or Medical/Nursing group, to individually assign an appropriate set of homecare activities to specific diagnoses codes that are coded according to Diagnosis Related Group (DRG) codification. These activity sets consist of diagnostic, monitoring and treatment activities that can be actually performed in home-environment, together with an appropriate nursing – activity treatment plan. These profiles of home-care activities are custom-made and every user, i.e. every physician responsible for discharging a patient from hospital, is actually allowed to set up his own profiles. During the formation of these profiles the user can attach to each activity a set of nominal fees. Thus, the developed system ignites, when relevant, the corresponding revision of an implicitly associated latent financial record that allows for an approximation of the individual case-cost.

Results and Conclusions

- The described solution is set up by employing simple, low-cost, commercially available components, supporting home-care patient's vital-signs monitoring and assisted ventilation.
- The system includes software means for the processing, the evaluation, and the targeted transmission of the acquired health-data, and software tools, for the planning, the documentation, and the management of the corresponding home-care case.
- The on-going testing of the system shows that it is able to contribute to an effective home – care package solution, supporting not only well organized nursing care, but further, a structured total Patient Supervision and Treatment home-care approach.

References

1. Spyropoulos B, Botsivaly M, Reducing Hospital length of stay through the formation of a Hi-Tec Home-care Environment, BROADMED/IEEE International Workshop on "Telemedicine over broadband and wireless networks", October 3, 2005, Boston, MA, USA.
2. Spyropoulos B, Tzavaras A, Botsivaly M, Koutsourakis K, Koulouris E, Liargovas D, Development of Low-Cost Hardware Supporting Mobile Home–Care, WC 2006, August 27 - September 1, 2006, Seoul, South Korea.
3. www.microchip.com Application Note 857 and Application Note 970.
4. www.astm.org ASTM E2369-05, Standard Specification for Continuity of Care Record.
5. Saba VK. Home Health Care Classification of Nursing Diagnoses and Interventions. Washington, DC: Georgetown University, 1994.