MEDINFO 2007
HISA Ltd Australia
© 2007 The authors. All rights reserved.

A Qualitative Study to the Telemedicine System in Taiwan: The Views of Medical Profession

Jer-Junn Luh[a], Po-Hsing Cheng[b], Heng-Shung Chen[c], and Jin-Shin Lai[d]

[a]*School and Graduate Institute of Physical Therapy, College of Medicine, National Taiwan University, Taipei, Taiwan*
[b]*Office of Information, National Taiwan University Hospital, Taipei, Taiwan*
[c]*School of Medicine, College of Medicine, National Taiwan University, Taipei, Taiwan*
[d]*Department of Physical Medicine and Rehabilitation, College of Medicine, National Taiwan University, Taipei, Taiwan*

Abstract

Taiwan launched a telemedicine service for rural area since 1995. In this study, a qualitative evaluations of Taiwan's telemedicine was performed to assess various measures of effectiveness (e.g., diagnostic accuracy), efficiency (e.g., cost), and participant's altitudes to determine its success. Qualitative data were collected from semistructured interviews with thematic analysis. Basically the system was successful to perform tele-consultation. However, network quality improvement, special instruments for different disease, and more specified training were also need for further telemedicine services.

Keywords:

telemedicine, qualitative study

Introduction

The use of telemedicine is beginning to change the health care industry[1-2]. The challenge now is to integrate these new technologies into the delivery of high quality health care. Patient and provider satisfaction is critical to the success of any health care delivery system. Costs and conveniences of telemedicine are critical issue for the Taiwan's telemedicine service.

Taiwan launched a telemedicine service for rural area since 1995. Four medical centers connected with remote medical organizations and, provided essential telemedicine services to the rural area [3]. However, lack of quality survey about the Taiwan's telemedicine project. Using qualitative research methods, we tried explored the experiences of users of Taiwan's telemedicine system.

Materials and methods

Telemedicine system in Taiwan

A low cost telemedicine system which constructed with inexpensive, commercially available parts and used SDSL network was developed for teleconsultation. This system contains two important devices: a videophone (TIA-8000, Tatung Inc, Taiwan) was used to provide video and audio communication; and a integrated platform which written by LabVIEW (National Instruments, TX) was used to provide heart and breathing sound, blood glucose, O2 saturation, and vital sign via SDSL network (512kbps). Figure 1 shows the function block diagram of this integrated platform.

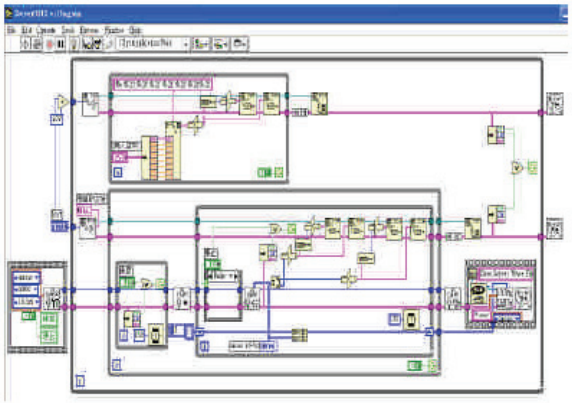

Fig 1 Block diagram (in Labview®) of the integrated platform

We cooperated with two national medical centers, two regional hospitals, and five remote native tribes which are all located inside Taiwan Central Mountain Area. This telemedicine communicated with internet to National Taiwan University Hospital (NTUH). The same data could also transmit to Puli Christian Hospital at mid-Taiwan. Meanwhile, National Cheng-Kung University Hospital which was a national medical center located at south Taiwan, is fully participating and connected with other four rural villages.

Study design

Qualitative data were collected from semistructured interviews with thematic analysis. First we used a questionnaire based to identify further respondents for the study, than we conducted in-depth interviews to collect additional free text data from the participants[4]. Our goal was to evaluate how the participants felt about the system in general..

Results

Nine healthcare professionals, including three family physicians, one physician of physical medicine and

rehabilitation, one general surgeon, one dermatologist, one obstetrician-gynecologist, one dietitian, and one physiotherapist, received our interviews. All the participants had at least two year experience about teleconsulting before this study. We reviewed efficiency, convenience of Taiwan telemedicine system, and attitudes towards telemedicine.

Efficiency of Taiwan's telemedicine system

To evaluate the efficiency of the system, the key point was to find out the medical profession felt that they could make medical decision by the telemedicine system. This was dependent on the quality of the video images and the high fidelity of the physiologic signals.

All of the participants mentioned that the telemedicine facilities were relatively simple and easy to be operated. However, special instruments should be included for special patients. Lung sounds were not clear to determine the tiny features of different diseases. They also hoped to have ultrasound image for liver and abdominal diseases screenings.

Beside the qualities of instruments, quality of network communication was also criticized by all participants. When it is in use, unstable bandwidth in the distance resulted in blurred vedio. Increasing the bandwidth and its stability can solve this problem.

Convenience of Taiwan's telemedicine system

Another question was lack of proper training to use the telemedicine facilities although all the participants were familiar with using a personal computer, webcam, internet, and other IT products. They also felt they need more training to perform teleconsulting.

Attitudes towards telemedicine

We also interviewed our participants about the attitudes towards telemedicine. All of our participants felt the telemedicine emerges mainly because people in rural area were inaccessible to quality services, so it should not be compared with traditional face-to-face medical services.

One major limitation of telemedicine was also mentioned by the surgeon and the obstetrician-gynecologist: No emergency procedure could be taken by internet.

However, one family physician suggested the telemedicine should be the screening system for the emergency case.

Discussion

It is clear that participants are more than willing to discuss their feelings about telemedicine, and that in general, they perceive telemedicine in a positive manner. Initial qualitative findings from this study will provide a valuable assessment of satisfaction with the system as it is being implemented.

All of the participants mentioned that the telemedicine facilities were relatively simple and easy to be operated. However, special instruments should be included for special patients.

As for special cases, telemedicine system should have the functions of real time diagnosis, long-term observation, and acute complication prevention, thus improve the quality of medical services, narrow the gap between doctors and patients, and build up the patients' confidence in the system.

Our participants' attitudes towards telemedicine were positive. Lack of patients' view points was a major limitation of this study. We only presented perceptions of health providers who were participate the telemedicine project. However, patient satisfaction was an important issue.

Conclusion

The Taiwan's telemedicine system was evaluated by an quantitative methods in the study. Basically the system was successful to perform teleconsultation. The medical profession that joined this telemedicine project suggested that this telemedicine system can provide suitable services for primary healthcare. This system might be able to improve the health care quality for the rural residents by a comprehensive medical service.

Restricted by environment differences, geographical distances, cost and time, the future development of the telemedicine system should be to satisfy the special need of different medical specialists, gain the patients' confidence, and provide more training about how to use the telemedicine instruments.

Acknowledgments

This research, "Mountain and Island Telemedicine: NTUH Cross-domain Telemedicine Project for Aboriginal Area," is fully supported by the DOH Taiwan and NTUH.

References

[1] Sanders JH, Bashshur RL. Challenges to the implementation of telemedicine. Telemed J. 1995:1 115–23.
[2] Wootton R. Telemedicine: A cautious welcome. BMJ. 1996:313 1375–6.
[3] Chen HS, Guo FR, Chen CY, Chen JH, Kuo TS. Review of telemedicine projects in Taiwan. Int J Med Inform 2001:61 117-29.
[4] Strauss A. Qualitative Analysis for Social Scientists. Cambridge: Cambridge University Press, 1987.

Address for correspondence

Prof. Jin-Shin Lai
Department of Physical Medicine and Rehabilitation
National Taiwan University Hospital
No. 7, Chun-Shan S. Rd, Taipei, Taiwan, ROC
Tel: 886-2-23123456 ext 6583, E-mail: jslai@ntu.edu.tw