MEDINFO 2007
HISA Ltd Australia
© 2007 The authors. All rights reserved.

Development of Clinical Data Warehouse System for Clinical Quality Indicators

Eun-Young Choi[a], So Young Moon[a], Chung Hee Lee[a], Eun Young Cho[b], Ji Eun Cha[c], Hee Sook Lim[c], Kyoo Seob Ha[d], Hyung-Ho Kim[e]

[a] *Department of Quality Assurance, Seoul National University Bundang Hospital, Gyeonggi-Do, Korea*
[b] *Department of Medical Information, Seoul National University Bundang Hospital, Gyeonggi-Do, Korea*
[c] *ezCare Tech co. Ltd ,Seoul, Korea*
[d] *Department of Psychiatry, Seoul National University Bundang Hospital, Gyeonggi-Do, Korea*
[e] *Department of Generl Surgery, Seoul National University Bundang Hospital, Gyeonggi-Do, Korea*

Abstract

Clinical Quality indicators can be a powerful tools of improving the effectiveness of patient care. For 18 months, 20 specialists at each disciplinary developed total 34 Clinical Quality indicators and build data marts based on the EMR system, then electrically constructed clinical data warehouse system. Through the clinical data warehouse system, real time retrieval and monitoring of Clinical Quality indicators was achieved.

Keywords:

quality indicators, data warehouse system

Introduction

Clinical Quality indicators can be powerful tools of improving the effectiveness of patient care. There is no consensus about indicators for measuring quality of Hospital care in Korea. Therefore, a systemic process was initiated recently to develop and monitor indicators for the measurement of quality of hospital care through data warehouse system.

Materials and methods

The research, developing a clinical quality indicator and constructing the computing system, was processed as follows for 18 month from April 2005 to September 2006.

1. Development of a clinical quality indicator.

We organize 20 field experts of a task force team and developed a clinical quality indicator through setting a specific definition of a clinical quality indicator and inter-departmental conference. And we also made standard format to develop clinical quality indicator for each field.

2. Data mart construction

To construct a clinical quality indicator data mart we went via data refining course after through investigation of electrical clinic record. After that we construct a clinical quality indicator data mart in the data warehouse system and accumulate data by complementing of document and developing new document.

Fig.1 explains the structure of CDW. CDW DB server consists of CPU:1GHz*4, OS: UNIX-AIX5L 5.1, DB:ORACLE 9.2.0.4 and web server is made up of CPU: 1.4Ghz, OS:Window2000 Advanced SERVER, DB: MSSQL2000. MicroStrategy 7i is used as OLAP. Oracle ODBC is used as a linking method between OLAP Intelligence Server and Oracle Metadata Server, and TCP/IP is used to link OLAP/Web Server and user.

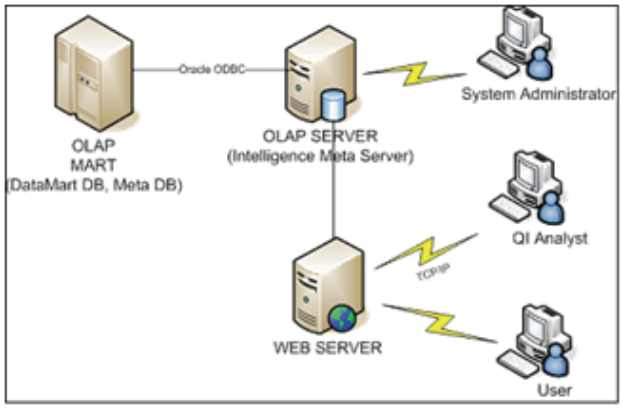

Figure 1 - Overall system configuration

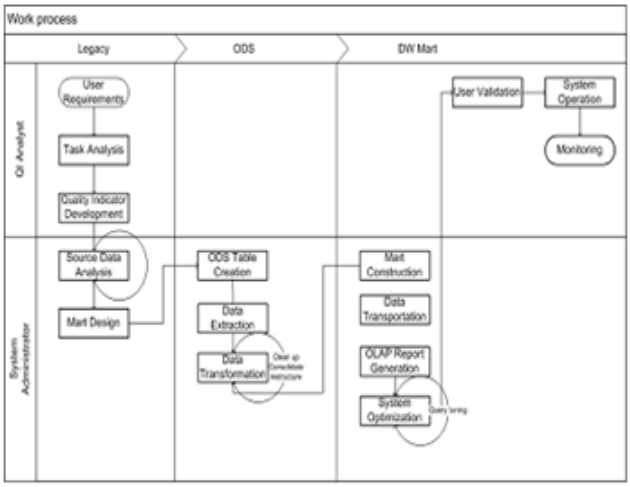

Figure 2 - Work process

3. Clinic-quality-index data warehouse system construction

A clinical quality indicator computing system is sort of data warehouse system developed by using MicroStarategy 7.2.3 Tool. Because of the task personality of a clinical quality indicator computing system, it is used for the analysis rather than a real-time process. So we used the database separately with the actual operation system.

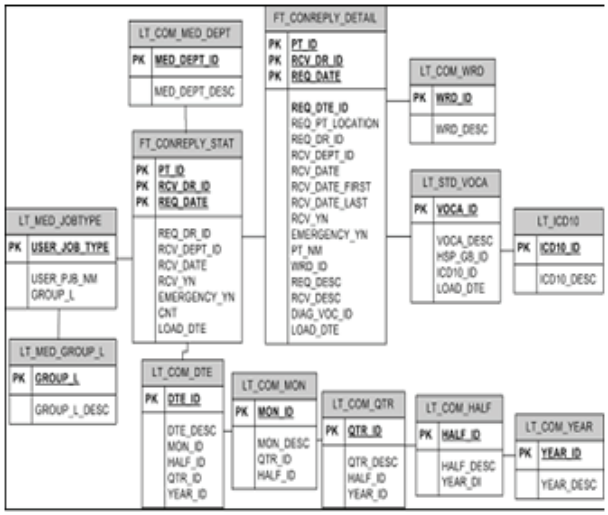

Figure 3 - Sample of ERD modeling

Results

We developed 34 clinic quality indexes and construct the data mart and did the computerizing it as a data warehouse system. The 34 clinical quality indicator item is listed on the table 1.

Table 1 - Lists of Clinical Quality Indicators (example)

domain	subdomain	clinical quality indicator
general	operation	waiting days for operation
		unexpected reoperation
	consult	response time to consult
	emerency room	readmissions to ER within 48 hours of discharge
	transfusion	return and disuse of blood
		RBC single unit
		side effect of transfusion
	CPR	survival after CPR
	mortality	mortality
		Deaths in hospital within 30 days of cystectomy surgery
		Deaths in hospital within 30 days of gastrectomy surgery
		Deaths in hospital within 30 days of prostectomy surgery
		Deaths in hospital within 30 days of nephrectomy surgery
	antibiotics	using days of antibiotics
specific	IM	(AMI patient) Aspirin at arrival
		(AMI patient) Aspirin at discharge
		AMI mortality
	AN	hypothermia after surgery
	nursing	pressure ulcer

Figure 4 - CDW system menu

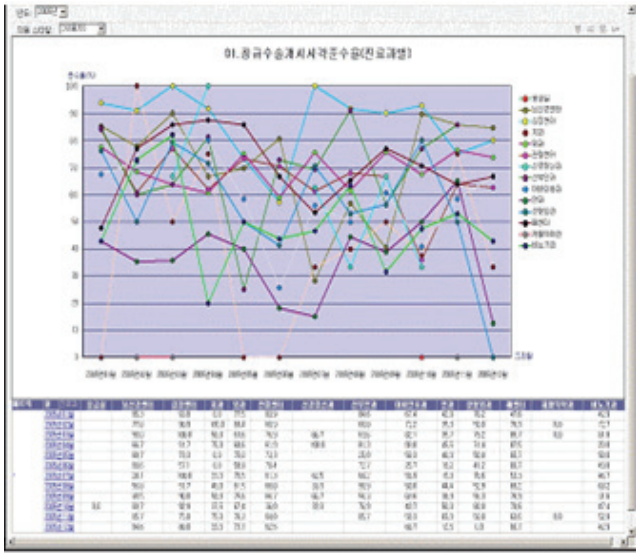

Figure 5 - graph showing the variation for a period

The screen of a clinical quality indicator of a parameter unit was implemented in data warehouse system. For its specific function such as detail data query facility in a specific total data, A annual or monthly trend query facility through the graph, optional query facility of grid and graph form, it can be possible to do real-time monitoring on specific clinical quality indicator.

Conclusion

Through the process of developing clinical quality indicator and constructing a data mart and computing system, we evaluate the possibilities of managing and applying clinical quality indicator with computing system.

The first feature of a clinical quality indicator computing system of Seoul National University Bundang Hospital is sufficient application of data that is based on electrical clinic record.

We used medical examination and treatment order, medical examination and treatment record, nursing record, inspection result as a real-time information. For its promptitude, we could investigate data easily. So many clinical quality indicator setups are expected to be possible. Also the time to be required could be reduced than the expected by using data which is coded and recorded in standardized term without further clinic-record query. Especially the possibility of practical using of formatting medical treatment and nursing records was a foundation of a clinical quality indicator computing setup.

Secondly we construct data mart and data warehouse in the system, which is separated with operating system. As a result a link information analysis that integrates data, stable refining and maintaining of latest information came to be possible. Also various analysis techniques are possible which use the graph and diverse analysis by patient, disease, and region. We prepared the basis to construct a disease-forecasting model through the data mining and expect to construct the screen of the report form afterwards.

The limit of a clinical quality indicator computing system setup is a precision verification side of the computing clinic record. In other words, wrong and missing record can be reflected as it is at a clinical quality indicator. But this problem can be solved by vocabulary system maintenance and continuous computing-clinic-record form supplementation.

Through this research, the simultaneous feedback and monitoring of many clinical quality indicator came to be possible. And also improvement inducing of each department came to be easy. From this result we can say that it is important to manage and monitor clinical quality indicator to induce a qualitative enhance of the medical treatment. We expect to develop and relate Critical pathway with Clinical Practice Guideline through the computerizing of developed clinical quality indicator.

References

[1] Rollow W, Lied TR, McGann P, Poyer J, LaVoie L, Kambic RT, Bratzler DW, Ma A, Huff ED, Ramunno LD. Assessment of the Medicare quality improvement organization program. Ann Intern Med. 2006 Sep 5;145(5):342-53. Weed L. Medical Records, Medical Education and Patient Care. 2nd ed. Cleveland: Case Western Reserve University Press, 1971.

[2] Zadeh LA. Is probability theory sufficient for dealing with uncertainty in AI: a negative view. In: Kanal LN and Lemmer JF, eds. Uncertainty in Artificial Intelligence. Amsterdam: Elsevier, 1986; pp. 103-16.

[3] Determining the Potential to Improve the Quality of Care in Australian Health Care Organisations. Trends in Quality of Care : Results of the ACHS Clinical Indicators. 1998~2000

[4] Guide toinpatient quality indicators: Quality of care in hospitals - volume, mortality, and utilization. Agency for Healthcare Research and Quality. June 2002.

Address for correspondence

Eun-Young Choi, Department of Quality Assurance, Seoul National University Bundang Hospital, Gyeonggi-Do 463-707, Korea. shaula@snubh.org