MEDINFO 2007
HISA Ltd Australia
© 2007 The authors. All rights reserved.

A Novel Population-Based Proband-Initial Algorithm for Family-Based Studies in Keelung Community-Based Integrated Screening: An Illustration of Hypertension

Yueh-Hsia Chiu[a,d], L-Sheng Chen[a,c], Grace Hui-Min Wu[a,b], Amy Ming-Fang Yen[a,c], Rex Chih-Chung Huang[a,b], Po-En Wang[d], Ting-Ting Wang[d], Tony Hsiu-Hsi Chen[a,c]

[a] *Institute of Preventive Medicine, National Taiwan University, Taiwan*
[b] *Tampere School of Public Health, University of Tampere, Finland*
[c] *Division of Biostatistics, National Taiwan University, Taiwan*
[d] *Health Bureau of Keelung City, Keelung City, Taiwan*

Abstract

The family-based information is the foundation for family care and community health promotion. Based on the multiple diseases integrated screening project and the completed popultion household registry system, we developed the efficient and flexible algorithm to asscertain the family-based structure for community public health management. We use the house-hold registry system to developed family-based pedigree and degrees of relatives on the basis of two-stage procedure. The algorithm followed the rule of family case-control proband method to catch other family members, not only for specific one type of disease, but also for various types of diseases. All relationship would be changed according to the proband located. During this algorithm development, we took the case-control family-proband study of hypertension to demonstrate the application and used proportional hazard model of Cox regression to compare the onset age of hypertension. Both random sampling and optimal relationship methods were revealed well for familial aggregation study of hypertension.

Keywords:

family-based, proband, population-based, screening

Introduction

Primary care is a critical role to identify individual risk of disease, including the inherited disease. However, the primary tool for the inherit risk assessment is family history and onset age of relatives, but there are few data can be taken, hence, how to build up the database is the important issue for preventive medicine, especially for community-based and population-based application. The development of population-based and family-based data has now increasingly gained attention in studies related to population genetic epidemiology. The process of genetic epidemiology includes a spectrum of stage from descriptive epidemiology, familial aggregation, segregation analysis, linkage analysis, fine mapping, the assessment of candidate gene associations, and gene characterization. Studies on each stage call attention to the requirement of population-and family-based data. The multiple disease screening model was initiated from 1999, which combined 5 types of cancers and 3 types of chronic disease, named as Keelung Community-based Integrated Screening (KCIS) project [1]. To deal with the large and complex data management, the health information management system has built up for referral and follow-up mission [2]. To date, this project served 85956 residents for screening from 1999 to 2005. According to the contents and relative information of house-hold registration system, KCIS project offers an opportunity to spawn population-based and family-based data for a series of diseases with the potential of familial aggregation. This novel idea and development has provided the efficient practice for epidemiological research and preventive medicine.

Material and methods

Data resource and structure

To understand and to elucidate the data resource and structure are very important for this population-based and proband-initiated study. The household registration of Taiwan inherited from the governed period of Japanese. The registration system is through two major ways for household management, one is personal identification registration and another is booklet of household registration. Both were performed from 1947 and computerized from 1985. The personal identification registration not only includes unique personal identification number, name, but also gender, birthday, names of father, mother and spouse, address, marriage or devoice, adoption or not, and date of death. Every household is provided unique household number and booklet which was listed and updated all family members' personal identification information as above.

Construction algorithm of trans-generational pedigree

A prospective cohort design was adopted using the community-based multiple screening program in Keelung, the northernmost county of Taiwan. All participants were informed the associated data management. We link the

house-hold registry system to developed family-based pedigree and degrees of relatives on the basis of two-stage procedure. Since the record for each resident of population registry contains the name of parents and household number both variables enables us to identify offspring descended from the same parents. The first stage was to link probands derived from the KCIS data with population registry by identical name of father and mother to construct three-generational pedigree for proband's family. The second stage was to ascertain degrees of relatives constructed in the first stage by identical name of spouse, mother and father for maternal series, paternal series and spouse, respectively, of relatives. The KCIS data was further linked with population registry by identical name of parents to construct trans-generation pedigree (at first stage) and to ascertain degrees of relationship at the second stage (Figure 1). In our study, we developed array algorithm to change the relationship for different proband, which is usable for familial aggregation studies of various diseases, please see Figure 2. Now, the family-based data was applied to study familial aggregation of hypertension with family case-control proband sampling design and of hypertension with entire cohort.

Statistical analysis

We took the proportional hazard model of Cox regression to compare the onset age of hypertension. Cox proportional hazards model was performed to model the hazard ratios (HR) for hypertension-onset age among cases and controls of the first-degree relatives, including parents, siblings, and offspring. The previous hypertension cases were taken the onset age from self-reported questionnaire as affected duration. The age at screening attendance of new diagnosed hypertension was also too. The exact ages at screening of normal cases were collected as censoring time. All models were adjusted for independent variables, such as gender, education levels, drink, hypertension history of parents and well-known biomarkers.

Results

There were a total of 8581 families with at least two family members who attended the KCIS between 1999 and 2004. Each relationship was defined by index case of family unit. Besides the 8581 index cases, there were 4925, 1863, 2448, and 9066 of spouses, parents, children and siblings, respectively. For example by offspring, the familial aggregation HR was 3.86 after adjusted for gender, education, triglyceride and waist (Table1).

Conclusion

The health information system of KCIS is not only provided the management of workflow and data, but also supported the management and applications by family-based approach. Our study based on family-based and family-proband methods to explore the familial aggregation of hypertension by relationship ascertainment from the population-based screening data. Familial aggregation of hypertension was modeled and demonstrated by Cox regression model.

Reference

[1] Chen THH, Chiu YH, Luh DL, et al. Taiwan Community-based Integrated Screening Group. Community-based multiple screening model: design, implementation, and analysis of 42,387 participants. Cancer 2004;100: 1734–43.

[2] Chiu YH, Chen LS, Chan CC, et al. Health information system for community-based multiple screening in Keelung, Taiwan (Keelung Community-based Integrated Screening No. 3). Int J of Med Inform 2006; 75:369-383.

Address for correspondence

Professor Tony Hsiu-Hsi Chen, Institute of Preventive Medicine, College of Public Health, National Taiwan University, Taipei, Taiwan. Room 521, No. 17, Hsu-Chow Rd, Taipei, Taiwan. Tel: +886-2-33228021; Fax: 886-2-23587707; E-mail: chenlin@ntu.edu.tw.

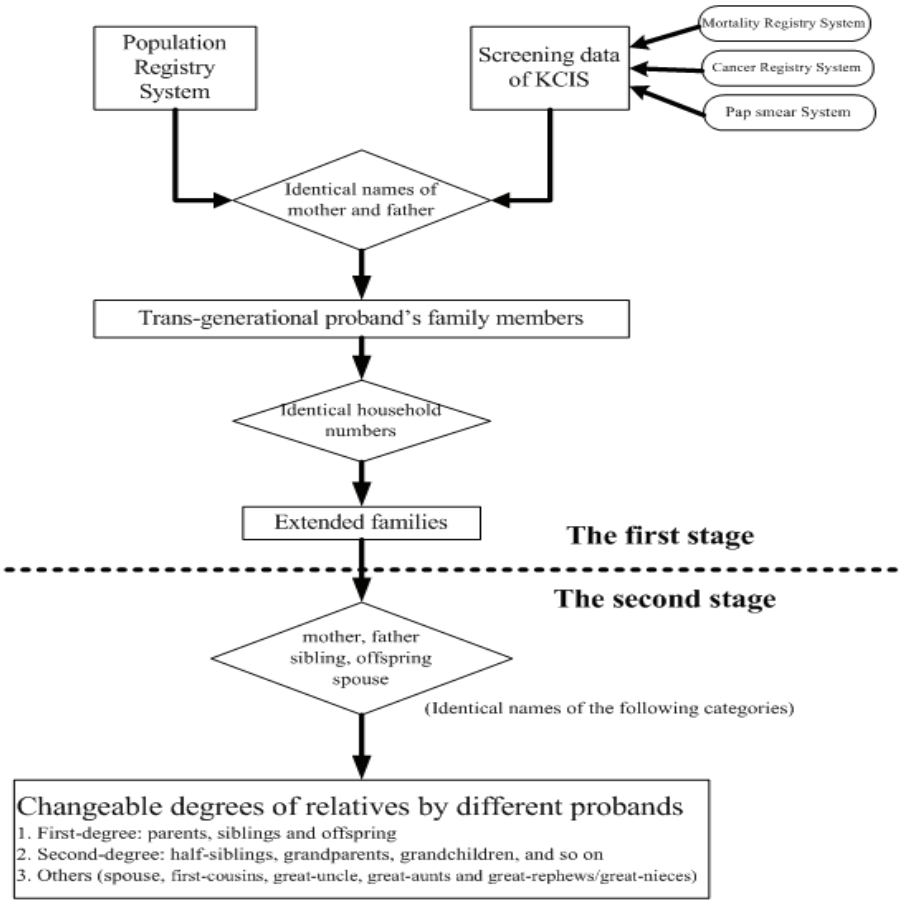

Figure 1 - Flow-chart for proband-initial construction of trans-generational pedigree

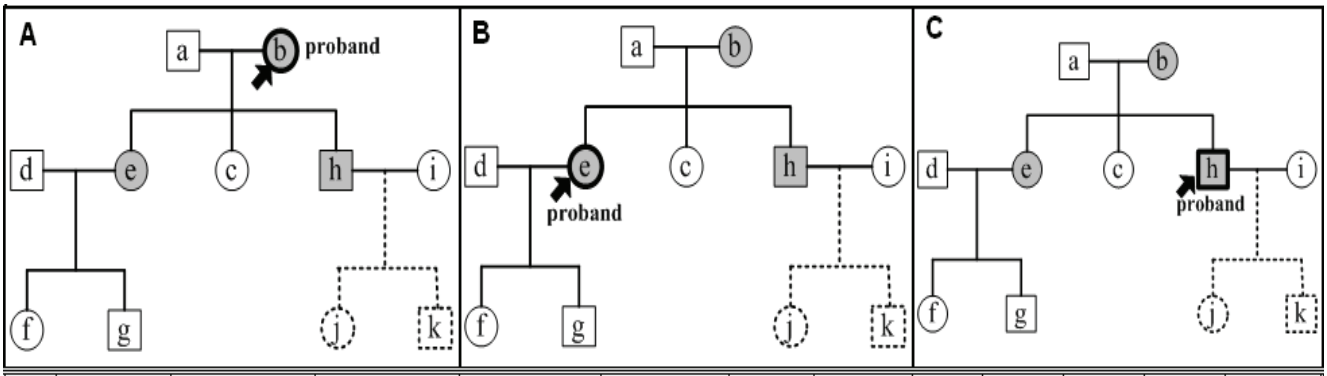

case.	Household Number	Name	Father	Mother	Spouse	Age	HTN Onset age	SBP	DBP	A	B	C
a	C2000001	Jack Wang	Jerry Wang	May Chen	Marry Fan	72		132	77	99	11	11
b	C2000001	Marry Fan	Michael Wu	Sherry Lai	Jack Wang	65	55	145	93	◆	12	12
c	C2000001	Marian Wang	Jack Wang	Marry Fan		42		130	80	14	16	16
d	C3300002	Patrick Chang	Linda Hsu	Robert Chang	Jenny Wang	44		123	75	50	99	50
e	C3300002	Jenny Wang	Jack Wang	Marry Fan	Jeffery Yen	40	40	142	95	14	◆	16
f	C3300002	Jane Chang	Patrick Chang	Jenny Wang		25		118	65	28	14	40
g	C3300002	Steven Chang	Patrick Chang	Jenny Wang		27		124	64	27	13	40
h	C4300004	Bill Wang	Jack Wang	Marry Fan	Amy Chang	42	42	138	90	13	15	◆
i	C4300004	Helen Lee	Edward Lee	Carlo Chen	Bill Wang	40		122	68	50	50	99

Figure 2 - Diagram for flexibleproband algorithm

Table 1 - Onset Age of Hypertension by Cox Model, adjusted for familial aggregation and risk factors (offspring)

variable	Class	Optimal Relationship		5000 Random Sampling	
		HR	95%CI	HR	95%CI
Familial aggregation		3.86 [c]	(2.88-5.16)	2.46	(2.03-3.06)
Gender	Male / Female	2.82 [c]	(2.02-3.92)	1.11	(0.90-1.37)
Education	Middle / High	2.32 [c]	(1.18-4.55)	2.53	(2.08-3.37)
Education	Low / High	3.94 [a]	(1.99-7.79)	3.78	(2.83-5.17)
Triglyceride	>=200 / <200	1.08	(0.74-1.57)	1.60	(1.35-1.95)
Waist	F>80cm, M>90cm	1.36	(0.98-1.88)	1.44	(1.13-1.91)
Total cholesterol	>=200 / <200	0.70 [a]	(0.51-0.96)	0.95	(0.79-1.14)

a : $0.01 \leq p < 0.05$ b : $0.0001 \leq p < 0.01$ c : $p < 0.0001$

HR: hazard ratio